Bissell Display
Display Products for Public Transport
Tel: 01543 502115 Fax: 01543 502118

POLE SOCKET

Assembly Drawing

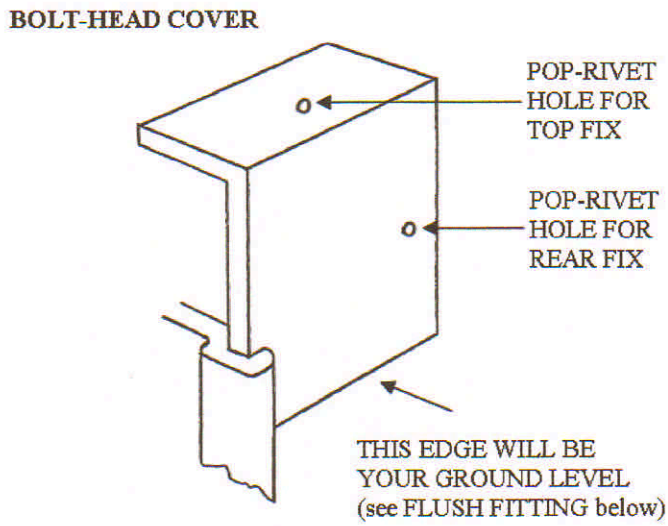

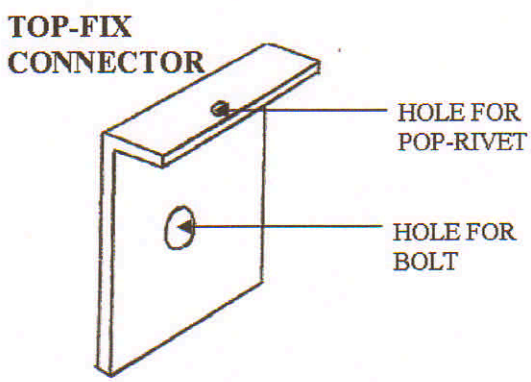

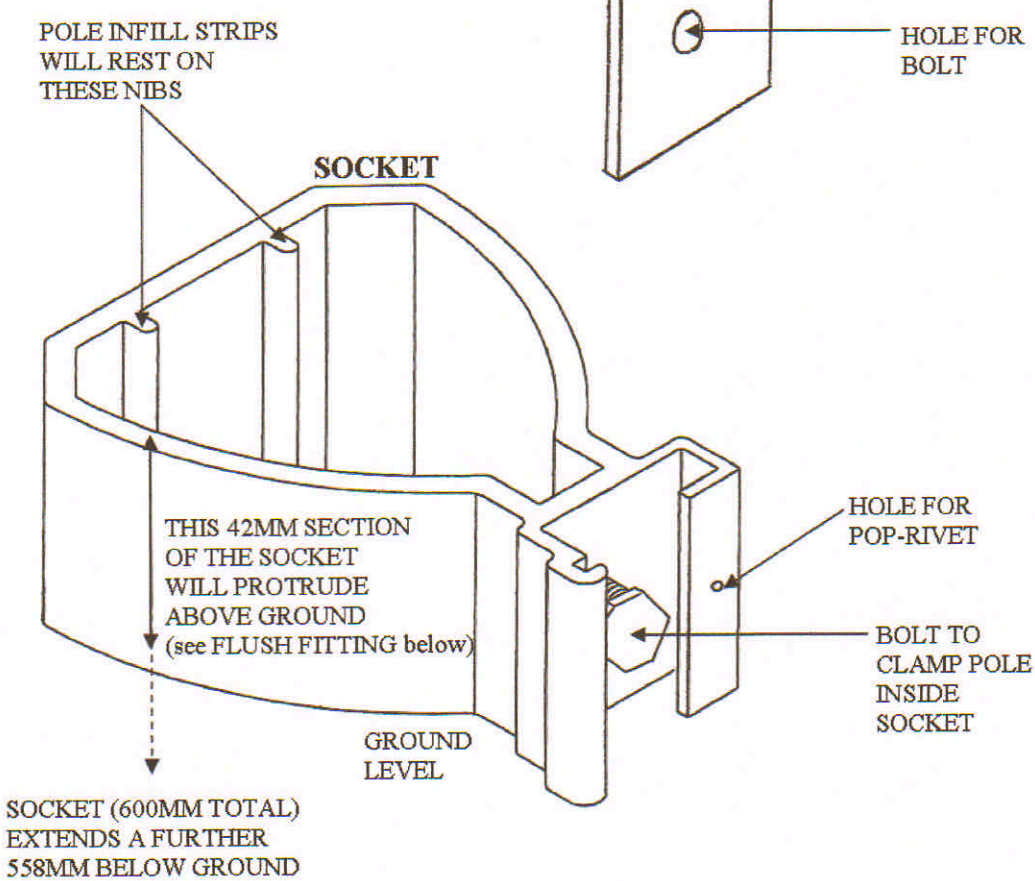

AN ADHESIVE-BACKED VINYL 'WRAP' HAS BEEN PROVIDED TO COVER THE BASE/LOWER PERIPHERY OF THE SOCKET SO THAT YOUR CONCRETE INFILL WILL NOT INTRUDE

FLUSH FITTING - THE SOCKET CAN BE FITTED FLUSH TO THE GROUND IF PREFERRED PROVIDED THE POLE IS SECURED PRIOR TO FINAL SURFACING